PocketBot2 USB Dock Station

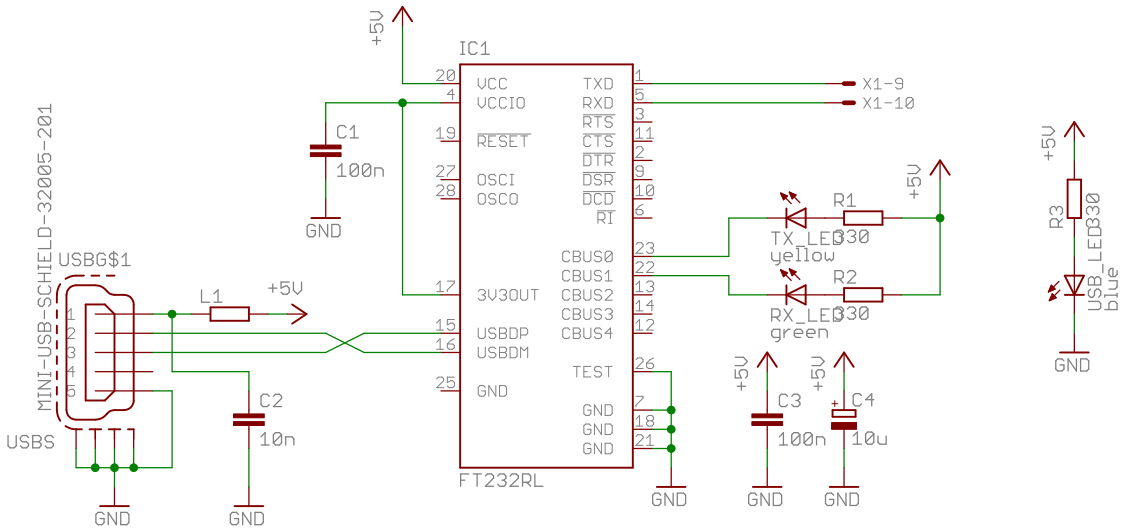

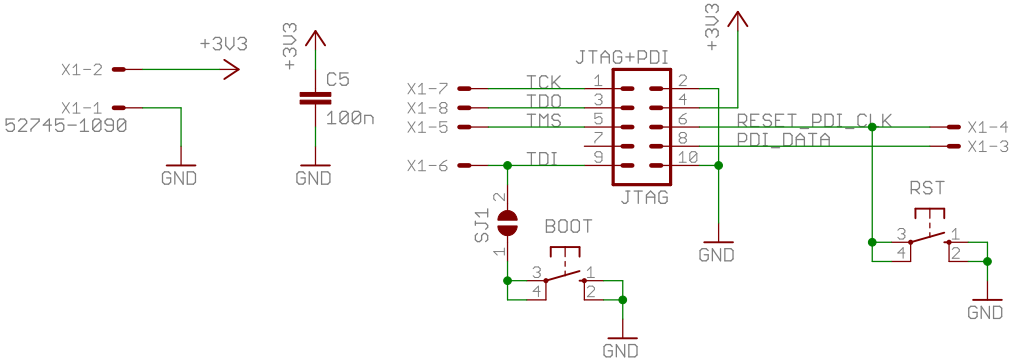

Ondrej Stanek